INSPECTOR-X

PRE/POST DRILLING INSPECTION SOLUTION

Description

Inspector-X delivers fast, real-time X-ray verification for drill-to-pad centering on multilayer PCBs. It automatically measures annular rings and identifies minimum tolerances with absolute precision.

By inspecting four preliminary corner holes the software instantly calculates exact X-Y offset corrections for your CNC drilling machine, drastically reducing scrap rates.

Beyond registration, the system performs advanced inner-layer inspection. It accurately measures track widths and clearances to detect hidden layout defects before they impact your production yield.

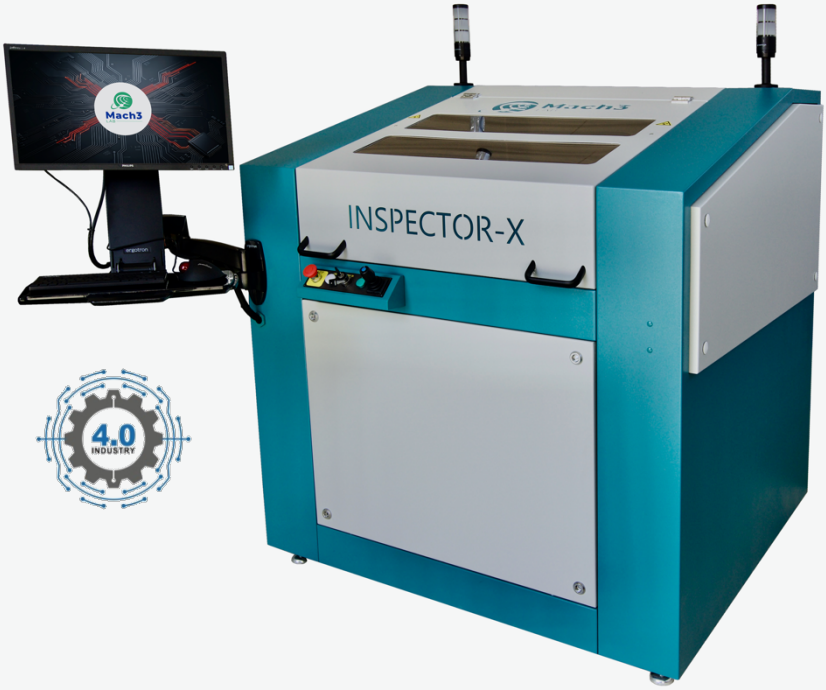



Safe and User friendly

- Thanks to its certified high shielding efficiency, the Inspector-X does not require the operator to wear any PPE or be monitored via a wearable exposure meter, and it is safe to use.
- The joystick enables operators to effortlessly center the inspection area, while the integrated potentiometer and dual-speed modes ensure both rapid traversal and fine micro-positioning across the panel.
- A dedicated red totem lamp always signals when the X-rays are on.

HEAD OFFICE
Via dal Pozzo, 14
13900 Biella (BI) – Italy

FACTORY
Strada Provinciale 593
13040 Alice Castello (VC) – Italy

Ph. **+39 0161 909127**
web **mach3lab.com** email **info@mach3lab.com**

Full management of the X-Ray and camera systems with control of KV and exposure time to work with the minimum X-Ray energy. Easy and fast setting by recalling a predefined parameter set including KV, Exposure Time, Frame Integration, etc.

Wide area for the image display

Measured data exportable to Excel (CSV)

Wide number of automatic and semi-automatic measuring tools

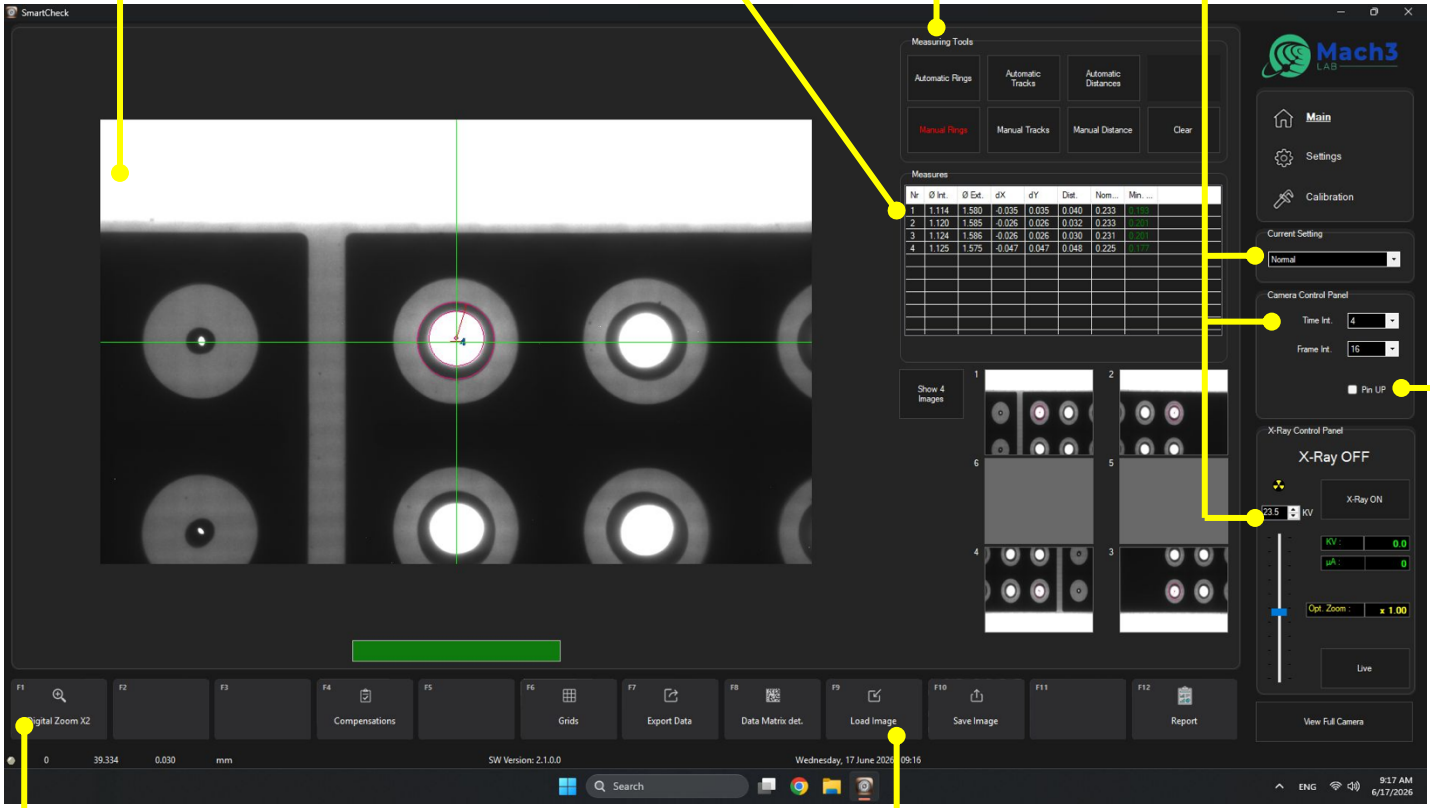

Save/Load images for remote operations (Workstation in the LAN) and Datamatrix Recognition

Pin-Up function to inspect panes with pins. The panel is inspected by flipping it with pins up, but the acquired images will be shown as in the normal panel orientation

Digital Zoom x2 at **high resolution** for accuracy in measurements **x1** for a large F.O.V. and easy individuation of the area to be inspected



Measurements of distances

- Click on the object and drag a “Region Of Interest” (ROI) to measure automatically diameters and distances between objects in the F.O.V.
- Results displayed in absolute or relative mode

Width measurements

Click and drag a “cut” to automatically measure the width of traces and insulation areas

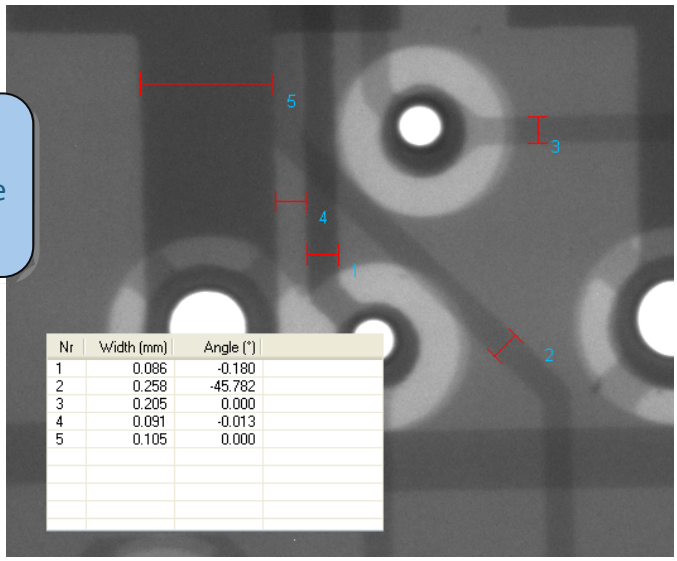

X-CHECK

Measure report

2012/12/14 09:58:59

Mach3 LAB

Note: Test Compensations
Part Number Ma-1234 **Batch** BT-415
Customer Mach3 Lab

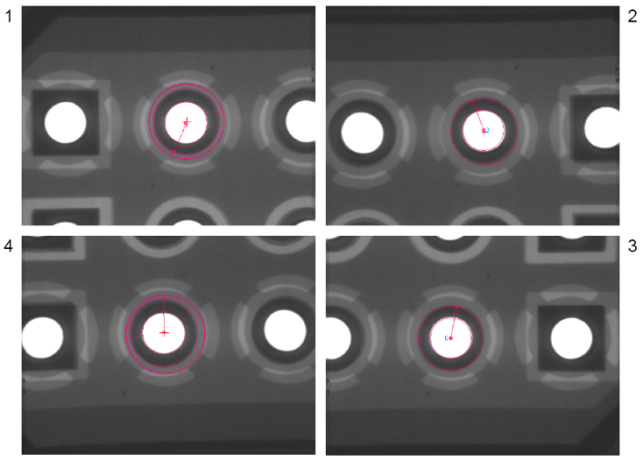

Measure results **Xc = 0.004 Yc = -0.009 Alfa [Deg] = 0.002**

Nr	Ø Int.	Ø Ext.	dX	dY	Dist.	Nom. Ring	Min. Ring
1	0.929	1.437	-0.016	-0.040	0.044	0.254	0.142
2	0.902	1.455	-0.012	0.033	0.035	0.277	0.210
3	0.900	1.420	0.002	0.008	0.008	0.260	0.252
4	0.948	1.494	0.000	0.018	0.018	0.273	0.255

Print-out of Report

- Customized logos
- I.d. texts typed in by the operator
- Single or quad image with measuring symbols
- Measured data table
- Print-out on paper or *.pdf file

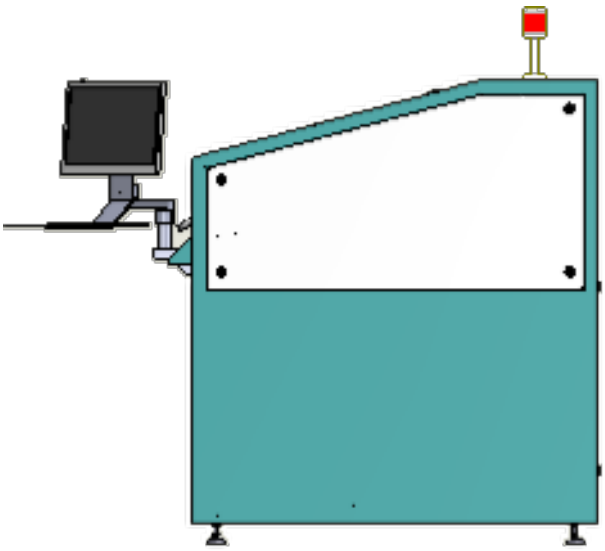

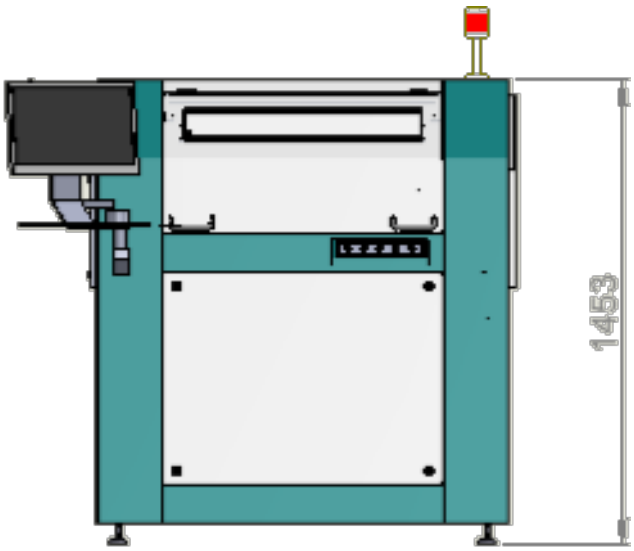

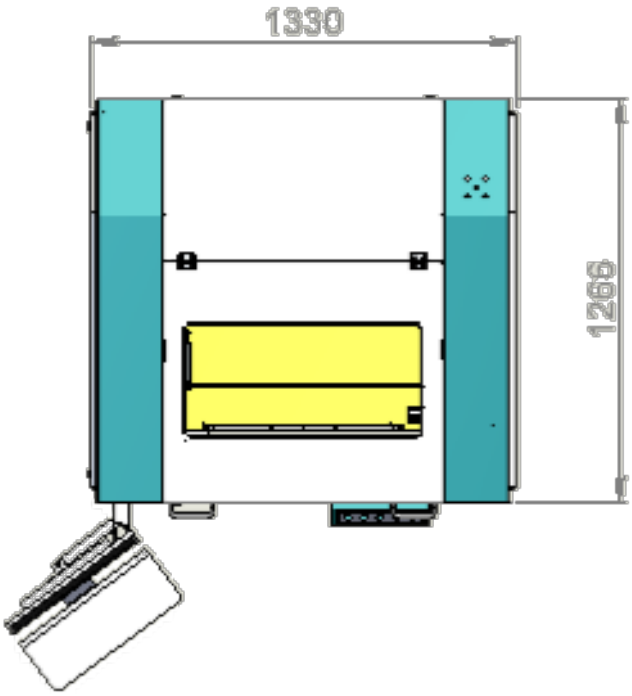

Power supply
Voltage: 110-220 Vac – 50/60 Hz
Consump.: 500 W

X-Ray
Max anodic voltage: 50 KV
Max anodic current: 1 mA
Focal spot: 50 µm
Cooling: Forced air
X-R Tube overtemp. check (alarm)
X-R lamp integrity check (alarm)
Automatic mA control
Automatic tube warm-up

Option
Data matrix printer

HEAD OFFICE
Via dal Pozzo, 14
13900 Biella (BI) – Italy

FACILITY
Strada Provinciale 593
13040 Alice Castello (VC) – Italy

Ph. **+39 0161 909127**
web **mach3lab.com** email **info@mach3lab.com**