X-CHECK 310MF

PRE/POST DRILLING INSPECTION BENCH

Description

The X-Check 310 MF delivers fast, real-time X-ray verification for drill-to-pad centering on multilayer PCBs. It automatically measures annular rings and identifies minimum tolerances with absolute precision.

By inspecting four preliminary corner holes—without depinning the panel—the software instantly calculates exact X-Y offset corrections for your CNC drilling machine, drastically reducing scrap rates.

Beyond registration, the system performs advanced inner-layer inspection. It accurately measures track widths and clearances to detect hidden layout defects before they impact your production yield.





An eye to the operator safety

- Thanks to its certified high shielding efficiency, the X-Check does not require the operator to wear any PPE or be monitored via a wearable exposure meter, and it is safe to use.
- A key switch selector prevents unauthorized personnel from operating with the machine.
- An automatic time-out cuts off the X-Ray emission after a couple of minutes.
- A dedicated red totem lamp always signals when the X-rays are on.

HEAD OFFICE
Via dal Pozzo, 14
13900 Biella (BI) – Italy

FACTORY
Strada Provinciale 593
13040 Alice Castello (VC) – Italy

Ph. **+39 0161 909127**
web **mach3lab.com** email **info@mach3lab.com**

Full management of the X-Ray and camera systems with control of KV and exposure time to work with the minimum X-Ray energy. Easy and fast setting by recalling a predefined parameter set including KV, Exposure Time, Frame Integration, etc.

Wide area for the image display

Measured data exportable to Excel (CSV)

Wide number of automatic and semi-automatic measuring tools

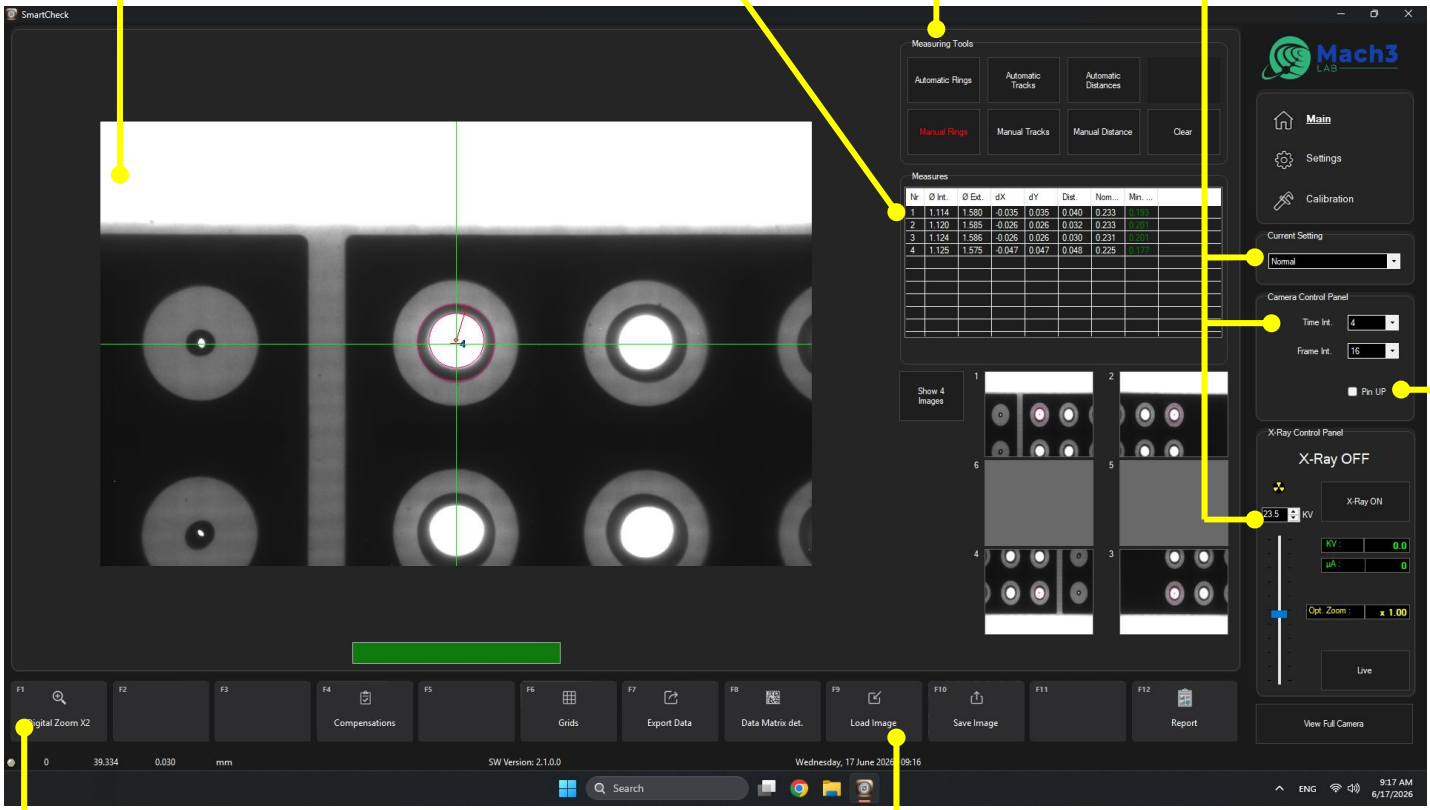

Save/Load images for remote operations (Workstation in the LAN) and Datamatrix Recognition

Pin-Up function to inspect panes with pins. The panel is inspected by flipping it with pins up, but the acquired images will be shown as in the normal panel orientation

Digital Zoom x2 at **high resolution** for accuracy in measurements
x1 for a large F.O.V. and easy individuation of the area to be inspected



Measurements of distances

- Click on the object and drag a “Region Of Interest” (ROI) to measure automatically diameters and distances between objects in the F.O.V.
- Results displayed in absolute or relative mode

Width measurements

Click and drag a “cut” to automatically measure the width of traces and insulation areas

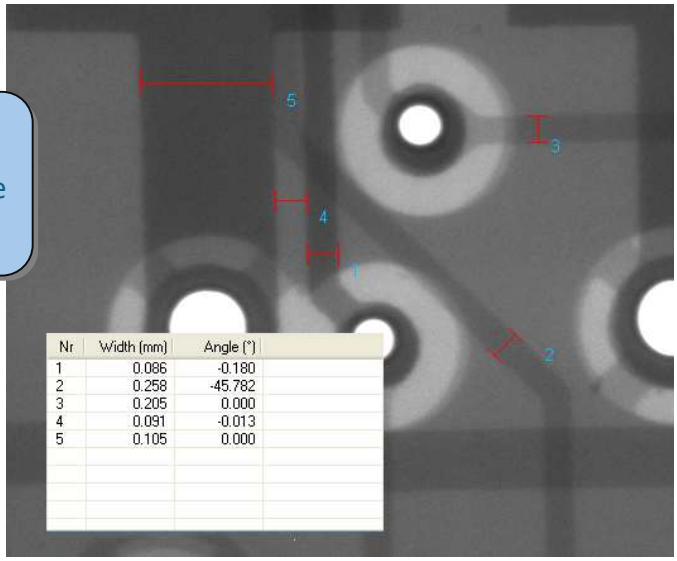

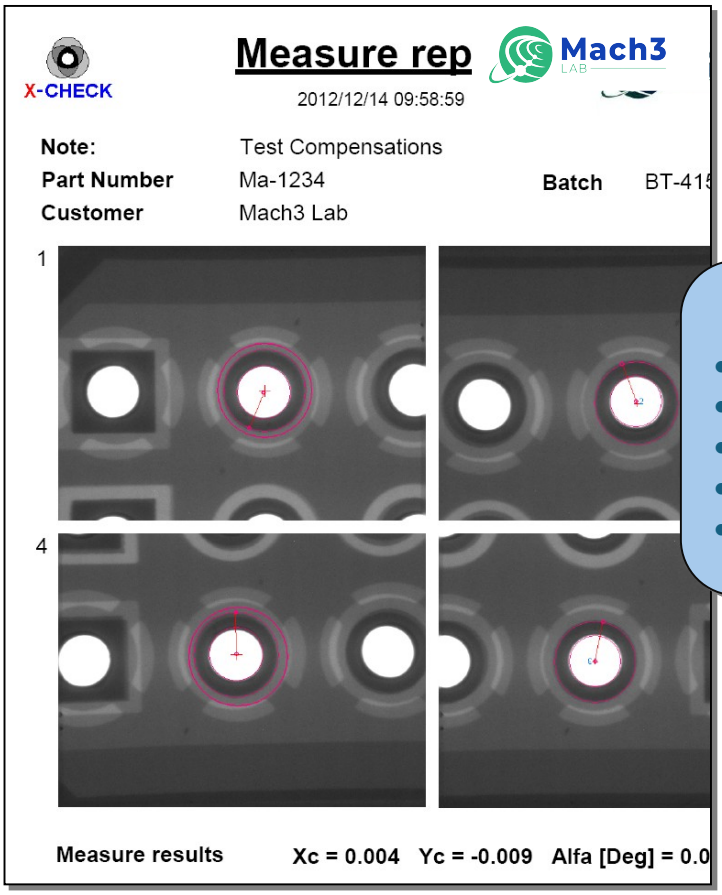

Print-out of Report

- Customized logos
- I.d. texts typed in by the operator
- Single or quad image with measuring symbols
- Measured data table
- Print-out on paper or *.pdf file

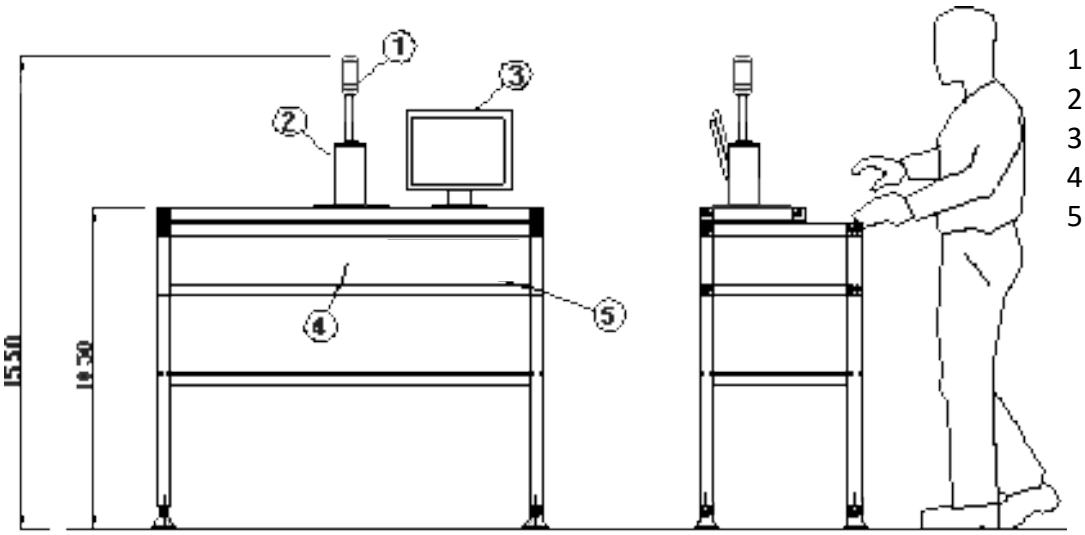

1 X-Ray ON lamp
2 X-Ray Camera
3 Full HD Monitor
4 X-Ray source housing
5 Control Unit

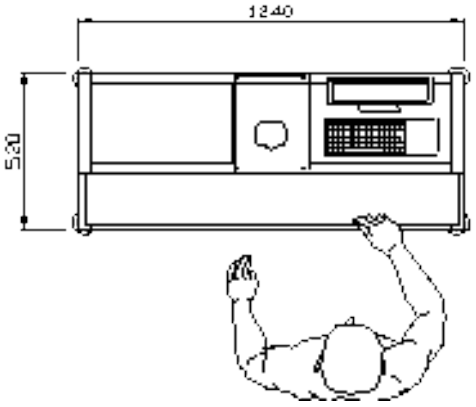

TECHNICAL CHARACTERISTICS AND OVERALL DIMENSIONS

Power supply
Voltage: 110-220 Vac – 50/60 Hz
Consump.: 500 W

X-Ray
Max anodic voltage: 50 KV
Max anodic current: 1 mA
Focal spot: 50 µm
Cooling: Forced air
X-R Tube overtemp. check (alarm)
X-R lamp integrity check (alarm)
Automatic mA control
Automatic tube warm-up

Inspecting details
Inspection: Full panel area
Panel input openings: 24 mm / 1” high

Option
Data matrix printer

HEAD OFFICE
Via dal Pozzo, 14
13900 Biella (BI) – Italy

FACTORY
Strada Provinciale 593
13040 Alice Castello (VC) – Italy

Ph. **+39 0161 909127**
web **mach3lab.com** email **info@mach3lab.com**